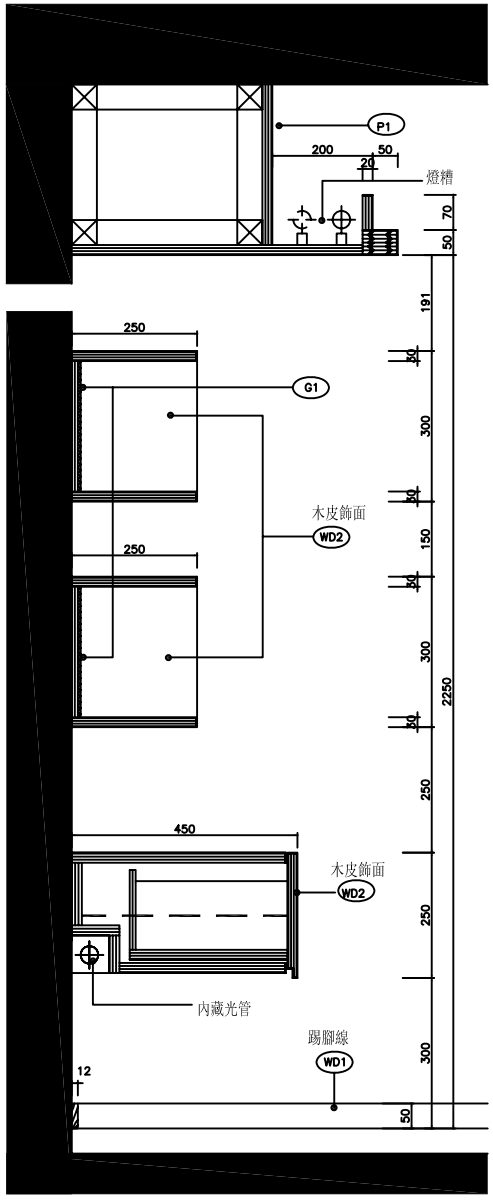

A 大樣圖
1 : 5

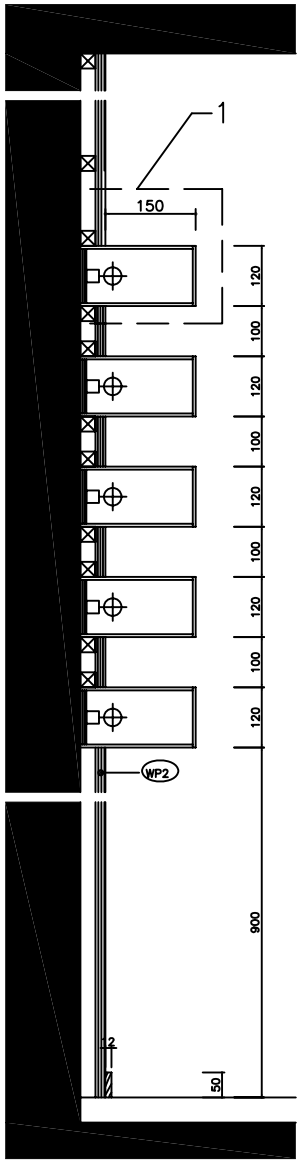

B 大樣圖
1 : 5

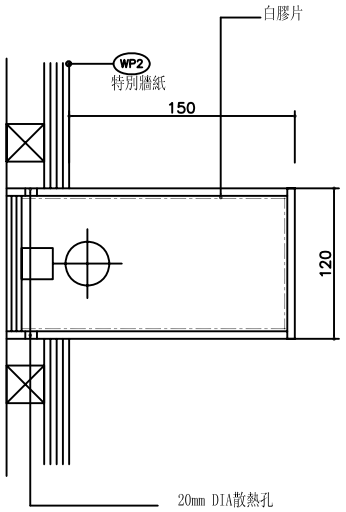

1 大樣圖
1 : 2

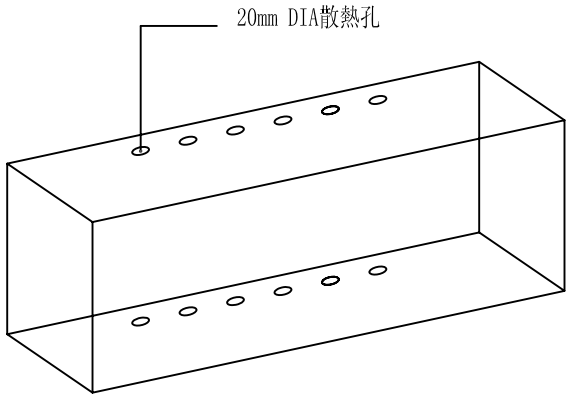

Notes & Legend

Do not scale from drawings.
All measurements must be verified on site.
The copyright of this drawing remains with the Architect.
This drawing is not valid for construction purposes unless expressedly certified.

REV.	DATE	DRAWN BY	APPROVED BY
-			

PROJECT
北京朗琴園三期

DRAWING TITLE
十號樓 標準層 B型 樓板房
大樣圖

DRAWING No
B-D-02

SCALE : AS SHOWN

Project Ref : D03166
BD Ref : -
FPS Ref : -
File Name : J:\

Signature for Submission/Construction

STEVELEUNG
DESIGNERS LTD